pennsylvania
DEPARTMENT OF TRANSPORTATION

465-12-06

DATE: May 10, 2012

SUBJECT: Driveway Policy for Unconventional Oil and Gas Development Drilling and Fracking Operations – Highway Occupancy Permits Program

TO: District Executives

FROM: Charles C. Goodhart, Director /s/
Bureau of Maintenance and Operations

The Driveway Policy for Unconventional Oil and Gas Development Drilling and Hydraulic Fracking Operations in the Department's **Highway Occupancy Permit (HOP) Program** is being updated as part of a general review of this program. This Strike-off Letter (SOL) is time neutral and intended to bring consistency to Department policy. This policy is developed to address the unique operational features of Marcellus and Utica Shale natural gas well drilling/fracking sites. Due to the intensity of traffic generated during the drilling/fracking process, it is imperative that a driveway design accommodate the type and volume of traffic generated. This policy was developed with input from the Unconventional Oil and Gas Industry, PennDOT Engineering Districts and Pennsylvania State Police.

It is strongly encouraged during the identification of these well sites to consider transportation logistics early in the process. From past experiences, the Department and Industry have witnessed poor site locations as contributing to significant costs or ineffective operations. Site identification should consider (but not be limited to): roadway infrastructure, impact on communities, site access, and the staging of equipment/materials/vehicles during drilling and fracking.

Driveways constructed for the drilling and fracking operations have the unique characteristics of generating large volumes of truck traffic for several weeks and then dissipating to volumes in the Department's minimum use driveway range. By this policy, driveways constructed for shale drilling and fracking shall be classified as minimum use driveways but designed to accommodate the type and volume of traffic generated by these operations.

An HOP application shall be submitted via the e-Permitting system, unless the Department determines that an application cannot be submitted electronically. It is the Department's goal to review applications and issue permits within thirty (30) days. This time frame can be significantly impacted by incomplete applications that must be returned for revisions.

Additionally, the Department's goal is to review modified design applications within thirty (30) days. Due to the complexity of a specialized review it will also be the Department's goal to issue permits in no more than two (2) "cycle" reviews. Again, these goals can be significantly impacted by incomplete applications causing the application to be retuned for numerous revisions.

As with all permits, the Department will inspect the constructed driveway for compliance with the issued permit. As noted in the Department's regulations, Chapter 441.6 (1)(ix), "The Department in granting a permit will waive none of its power or rights to require the future change in operation, removal, relocation or proper maintenance of any access within State Highway right-of-way." Any changes or modifications directed by Department staff will be based on objective criteria.

Effective with the issuance of this letter, the HOP Policies are now revised to accommodate Unconventional Oil and Gas Industry operations. A new Minimum Use Driveway template has been developed for use by this industry and is included with this SOL for use by District Permit Managers and Staff. Also attached are new and replacement sheets to be used to update existing publications. Please remove and destroy replaced sheets:

- Pub. 170, HOP Manual, Chapter 3.8, Driveways for Unconventional Oil & Gas Development Drilling and Fracking Operations, pp. 2 and 77A.
- Pub. 282, HOP Guidelines, Chapter 3.7, Driveways for Unconventional Oil & Gas Development Drilling and Fracking Operations, pp. 2, 5, & 61A, and Appendix B-5, Minimum Use Driveway Design for Unconventional Well Sites, pg. 191.

Should you have any questions, please contact Michael Dzurko, Highway Occupancy Permits Program Manager, at 717-783-6080.

Attachments

465/SEB/hmq

CC: Assistant District Executives -- Maintenance
Highway Occupancy Permit Managers
Steven Roth, Assistant Counsel, Office of Chief Counsel
Thomas Haist, Assistant Counsel in Charge, Office of Chief Counsel
Stephen Grimme, P.E., Chief, Highway Safety and Traffic Engineering Division, BOMO
Bruce Harter, Chief, Maintenance Performance Division, BOMO
Steven Koser, P.E., Chief, Roadway Management, BOMO
Glenn Rowe, P.E., Chief, Traffic Engineering and Permits Section, BOMO
Michael Dzurko, Highway Occupancy Permits Program Manager, BOMO
Mark Gaines, P.E., Marcellus Shale Project Manager, BOMO
Melody Matter, P.E., Marcellus Shale Consultant, BOMO
Adrian Fogle, P.E., Marcellus Shale Consultant, BOMO
Jason Hursh, P.E., Marcellus Shale Consultant, BOMO
Steven Barry, Marcellus Shale Consultant, BOMO
RSC Read File

3.2 -- HOP APPLICATION REVIEW POLICY 46
Access Application 60-day Deemer 47
3.3 -- PRELIMINARY REVIEW OF APPLICATIONS BY COUNTY STAFF 49
Access Applications 49
Sound Land Use 50
Engineering District Process 50
Utility Applications 51
Photodocumentation 51
Regulations and Publications 52
Forms 52
3.4 -- HOP FEES 53
Application, Issuance, and General Inspection Fees 53
Fee Exceptions 54
Additional Fees 56
Charge Calculation and Processing 57
Supplement Fees 57
Method of Payment 57
Refund of Fees 57
Uncollectible Check(s) 58
Township Fees 58
3.5 -- HOP APPLICATION CLEARANCE FORMS (M-930 SERIES) 59
M-930 D – Driveways 59
M-930 N – Non-Utility 61
M-930 S – Security Documents 62
M-930 U – Utilities 63
Processing M-930 Forms 65
3.6 -- RECORDING A HIGHWAY OCCUPANCY PERMIT 66
3.7 -- ADDITIONAL HOP APPLICATION REQUIREMENTS 67
Restoration Security 67
Indemnification 70
Insurance 71
Photodocumentation 72
Traffic Control Plan 72
Traffic Impact Study 73
Drainage Impact Report (a.k.a. Drainage Control Report) 73
Drainage Release (Form M-947) 74
Access Covenant (Form M-946) 75
Additional Application Information 75
Private Status 76
Permit Agreements 77
3.8 -- MISCELLANEOUS REVIEW OF APPLICATION 77A
Driveways for Unconvential Oil & Gas Development Drilling and Fracking Operations 77A
Mine Entries and Strip Mining Operations 78
Seismic Surveys 78
Traffic Signal Installations 78
Highway Lighting 79
Limited Access Interchanges, Assess Points, and Ramps 79
Limited Access Highways 79
Construction of Sidewalk, Curb, or Storm Water Facilities 80
Turnpike Permits 82
Transverse Pavement Openings 82
Longitudinal Occupancy -- Subsurface 83
Longitudinal Occupancy -- Aboveground 83
Aboveground Crossings 84
Slope Easements 85
Research Project Permits 86
Instances Where Highway Occupancy Permit Is Not Required 87

3.8 -- Miscellaneous Review of Application

Driveways for Unconventional Oil & Gas Development Drilling and Fracking Operations

Driveways constructed for drilling and fracking operations have the unique characteristics of generating large volumes of truck traffic for several weeks and then dissipating to volumes in the Department's minimum use driveway range. Driveways constructed for the purpose of drilling and fracking operations only, shall be classified as minimum use driveways but designed to accommodate the type and volume of traffic generated by these operations. It is strongly encouraged, during the identification of well sites, to consider transportation logistics early in the process. Site identification should consider (but not be limited to): roadway infrastructure, impact on communities, site access, and the staging of equipment/materials/vehicles during operations, especially when drilling and fracking.

If the proposed driveway access is located on a weight-posted state route, the permittee shall notify the District Posted and Bonded Roads Coordinator and provide copies of any application submissions and the issued Highway Occupancy Permit.

A standard driveway design has been created that safely accommodates the traffic generated but also insures turning vehicles do not conflict with the traveling public at the driveway entrance. The standard driveway design can be found in Appendix B5. This design is based on the following criteria:

- The site is used exclusively for unconventional oil and gas well drilling/fracking operations. Any other uses, such as impoundment sites, will need to be evaluated independently.
- The design vehicle is a 48' trailer/tanker used for hauling water or sand.
- The driveway accommodates full movements in all directions for the design vehicle.
- Truck turning overlaps are permitted on the driveway approach (if appropriately controlled). Conflicts from truck turning overlaps on the Department's right-of-way are strictly prohibited.

In addition to other required documentation as part of a submission, the standard drawing shall be attached to the Highway Occupancy Permit (HOP) application. Not all well sites will require a driveway design that incorporates the design criteria outlined above. Examples of design criteria that may not be applicable: a well site which has water piped to the well and smaller trucks are used to transport the sand; or a well site where trucks will not make right turns out of the site. In these cases it may be appropriate to submit a modified driveway design with the application. Any modified design must have a justification for the modification and documentation of the ability of the driveway to accommodate the drilling and fracking traffic without creating a safety issue or conflict on the state highway.

Please note, all Permittee's must comply with all applicable Pennsylvania and Federal Laws, Rules, and Regulations pursuant to 67 Pa. Code §441.6(2)) including environmental approvals and permits. As a means of clearly reminding the applicant, the following condition may be added to the Highway Occupancy Permit:

> *The Permittee must comply with all applicable Pennsylvania and Federal Laws, Rules, and Regulations pursuant to 67 Pa. Code §441.6(2)) including environmental approvals and permits prior to beginning hauling operations related to unconventional oil and gas development.*

Method of Payment ... 48
Refund of Fees ... 48
Uncollectible Check(s) ... 49
Township Fees ... 49
3.5 -- RECORDING A HIGHWAY OCCUPANCY PERMIT ... 50
3.6 -- ADDITIONAL HOP APPLICATION REQUIREMENTS ... 51
Restoration Security ... 51
Indemnification ... 54
Insurance ... 55
Photodocumentation ... 56
Traffic Control Plan ... 56
Traffic Impact Study ... 57
Drainage Impact Report (a.k.a. Drainage Control Report) ... 57
Drainage Release (Form M-947) ... 58
Access Covenant (Form M-946) ... 59
Additional Application Information ... 59
Private Status ... 60
Permit Agreements ... 61
3.7 -- MISCELLANEOUS REVIEW OF APPLICATION ... 61A
Driveways for Unconvential Oil & Gas Development Drilling and Fracking Operations ... 61A
Mine Entries and Strip Mining Operations ... 62
Seismic Surveys ... 62
Traffic Signal Installations ... 62
Highway Lighting ... 63
Limited Access Interchanges, Assess Points, and Ramps ... 63
Limited Access Highways ... 63
Construction of Sidewalk, Curb, or Storm Water Facilities ... 64
Turnpike Permits ... 65
Transverse Pavement Openings ... 66
Longitudinal Occupancy -- Subsurface ... 67
Longitudinal Occupancy -- Aboveground ... 67
Aboveground Crossings ... 68
Slope Easements ... 69
Instances Where Highway Occupancy Permit Is Not Required ... 70
Instances Where Highway Occupancy Permit Cannot Be Issued ... 71
3.8 -- VIEWING PENNDOT INFORMATION ON-LINE ... 72
Viewing PENNDOT Video log “on-line” ... 72
Viewing PENNDOT County Maps “on-line” ... 72
Viewing PENNDOT Publications “on-line” ... 72
3.9 -- HOP SIGHT DISTANCE OVERVIEW ... 73
Velocity (V) ... 73
Legal Speed ... 73
Safe-Running Speed ... 74
85th Percentile Speed ... 74
Measuring Driveway Sight Distances ... 75
Insufficient Sight Distance ... 75
Vegetation on Adjacent Property ... 76
3.10 -- BRIDGE OCCUPANCY LICENSE (BOL) PROGRAM ... 77
Law ... 77
Regulation and Policy ... 77

CHAPTER 4 -- ISSUANCE OF PERMIT ... 79

4.1 -- PERMIT ISSUANCE ... 79
4.2 -- MODIFICATIONS ... 80
4.3 -- DISTRIBUTION AND RETENTION OF PERMIT, PLANS AND RECORDS ... 81
4.4 -- SUPPLEMENTAL HIGHWAY PERMIT (ELECTRONIC FORM M-945 S) ... 82
4.5 – CANCELLATION OR ASSIGNMENT OF PERMIT ... 83
Cancellation -- Refund ... 83

Recording Copy; Form M-945 RC 154
Supplemental Highway Permit; Form M-945 S 156
Acknowledgment – Additional Highway Restoration Obligation; Form M-945 U 157
Certificate of Insurance; Form M-945 X 158
Notice of Dispute; Form M-945 Y 159
Access Covenant; Form M-946 160
Drainage Release; Form M-947 161
Assignment of Permit or License; Form M-948 162
Utility Sketch (Single Pole Placement); Form M-949 A 163
Utility Sketch (Multi-Pole Placement); Form M-949 B 164
Utility Sketch (Surface Openings Less Than 500 L.F.); Form M-949 C 165
Application for Minimum Use Driveway; Form M-950 A 166
Agent Authorization; Form M-950 AA 166A
Application Return Notification; M-950 AR 167
Deed, Fee Simple; Form M-950 D1 168
Deed of Easement; Form M-950 D2 169
Deed of Easement (Drainage); Form M-950 D3 170
Acknowledgment -- Reimbursement Obligation for Access Application Review; Form M-950 H 171
Indemnification Agreement; Form M-950 I and Covenant; Form M-950 IC 172
HOP Obligation Bond; Form M-950 K and HOP "Blanket" Bond; Form M-950 K1 174
Irrevocable Letter of Credit (Access); Form M-950 L 176
Land Use Questionnaire; Form M-950 MPC 177
Agreement of Release; Form M-950 R 178
Driveway Formula Sight Distance (FSD) Measurements; Form M-950 S 179
Safe-Running Speed Determination; Form M-950 SRS 180
Certificate of Insurance (Access); Form M-950 X 181

CHAPTER 9 -- FORMS AND PUBLICATIONS 183

9.1 -- GENERAL 183
9.2 -- FORMS 184
9.3 -- PUBLICATIONS 186
9.4 -- REGULATIONS 187

APPENDIX "A" -- METRIC CONVERSIONS 189

APPENDIX "B" SERIES 191

APPENDIX B -- RECOMMENDED HOP APPLICATION PROCESS 191
APPENDIX B1 -- HOP PROJECT SCOPING MEETING CHECKLIST 191
APPENDIX B2 -- TIS SCOPING MEETING CRITERIA 191
APPENDIX B3 -- TIS SCOPING MEETING CHECKLIST 191
APPENDIX B4 -- HOP STORM WATER FACILITY GUIDEBOOK 191
APPENDIX B5 -- MINIMUM USE DRIVEWAY DESIGN FOR UNCONVENTIONAL WELL SITES 191

3.7 -- Miscellaneous Review of Application

Driveways for Unconventional Oil & Gas Development Drilling and Fracking Operations

Driveways constructed for drilling and fracking operations have the unique characteristics of generating large volumes of truck traffic for several weeks and then dissipating to volumes in the Department's minimum use driveway range. Driveways constructed for the purpose of drilling and fracking operations only, shall be classified as minimum use driveways but designed to accommodate the type and volume of traffic generated by these operations. It is strongly encouraged, during the identification of well sites, to consider transportation logistics early in the process. Site identification should consider (but not be limited to): roadway infrastructure, impact on communities, site access, and the staging of equipment/materials/vehicles during operations, especially when drilling and fracking.

If the proposed driveway access is located on a weight-posted state route, the permittee shall notify the District Posted and Bonded Roads Coordinator and provide copies of any application submissions and the issued Highway Occupancy Permit.

A standard driveway design has been created that safely accommodates the traffic generated but also insures turning vehicles do not conflict with the traveling public at the driveway entrance. The standard driveway design can be found in Appendix B5. This design is based on the following criteria:

- The site is used exclusively for unconventional oil and gas well drilling/fracking operations. Any other uses, such as impoundment sites, will need to be evaluated independently.
- The design vehicle is a 48' trailer/tanker used for hauling water or sand.
- The driveway accommodates full movements in all directions for the design vehicle.
- Truck turning overlaps are permitted on the driveway approach (if appropriately controlled). Conflicts from truck turning overlaps on the Department's right-of-way are strictly prohibited.

In addition to other required documentation as part of a submission, the standard drawing shall be attached to the Highway Occupancy Permit (HOP) application. Not all well sites will require a driveway design that incorporates the design criteria outlined above. Examples of design criteria that may not be applicable: a well site which has water piped to the well and smaller trucks are used to transport the sand; or a well site where trucks will not make right turns out of the site. In these cases it may be appropriate to submit a modified driveway design with the application. Any modified design must have a justification for the modification and documentation of the ability of the driveway to accommodate the drilling and fracking traffic without creating a safety issue or conflict on the state highway.

Please note, all Permittee's must comply with all applicable Pennsylvania and Federal Laws, Rules, and Regulations pursuant to 67 Pa. Code §441.6(2)) including environmental approvals and permits. As a means of clearly reminding the applicant, the following condition may be added to the Highway Occupancy Permit:

> *The Permittee must comply with all applicable Pennsylvania and Federal Laws, Rules, and Regulations pursuant to 67 Pa. Code §441.6(2)) including environmental approvals and permits prior to beginning hauling operations related to unconventional oil and gas development.*

MINIMUM USE DRIVEWAY PLAN

50-SCALE

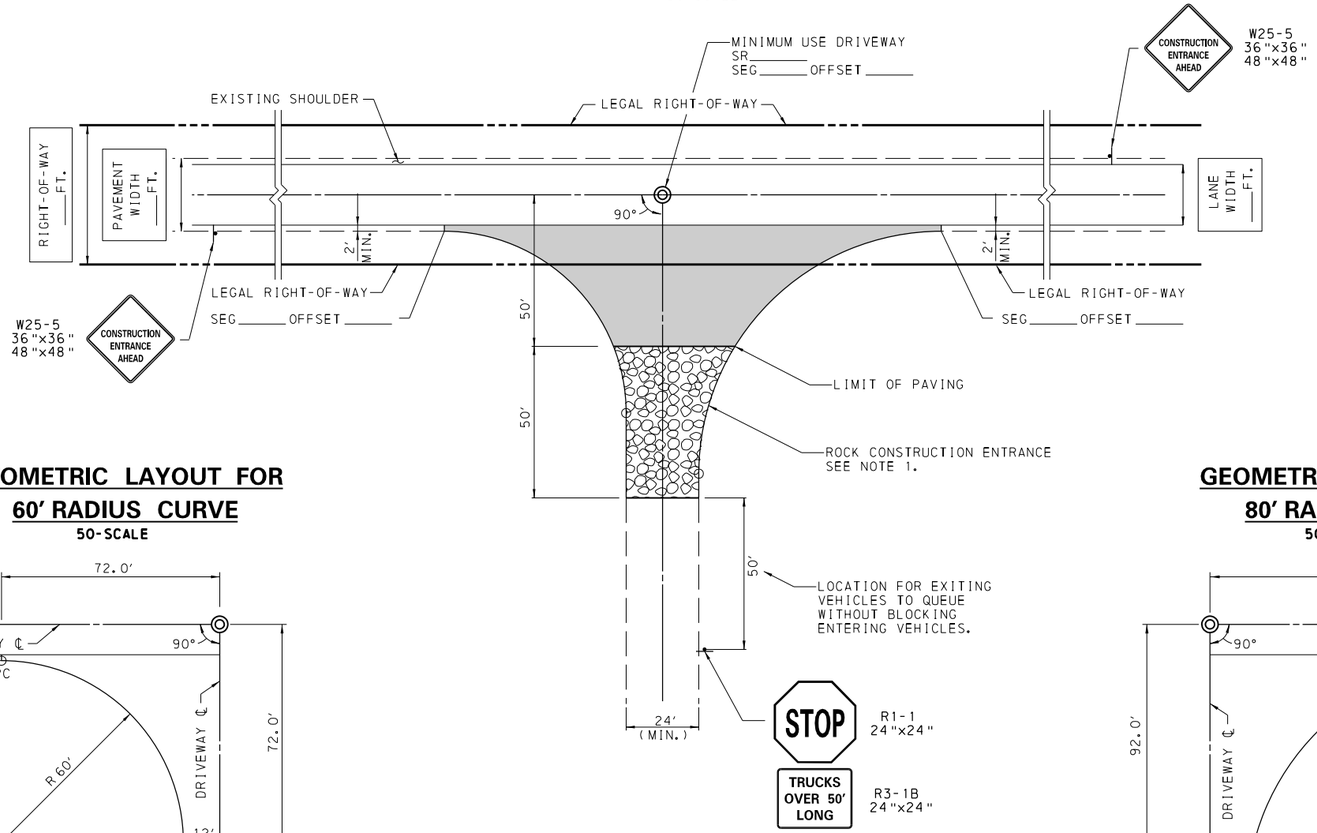

GEOMETRIC LAYOUT FOR 60' RADIUS CURVE

50-SCALE

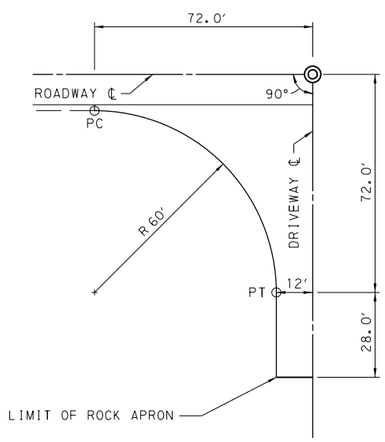

GEOMETRIC LAYOUT FOR 80' RADIUS CURVE

50-SCALE

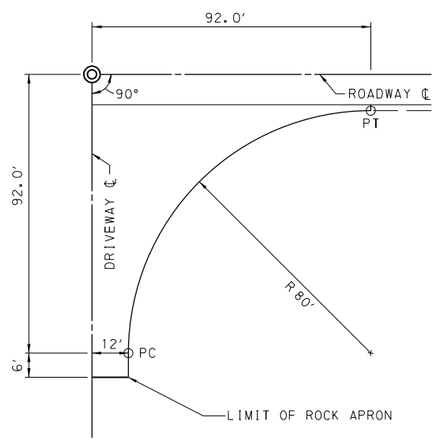

DRIVEWAY TYPICAL SECTION

NTS

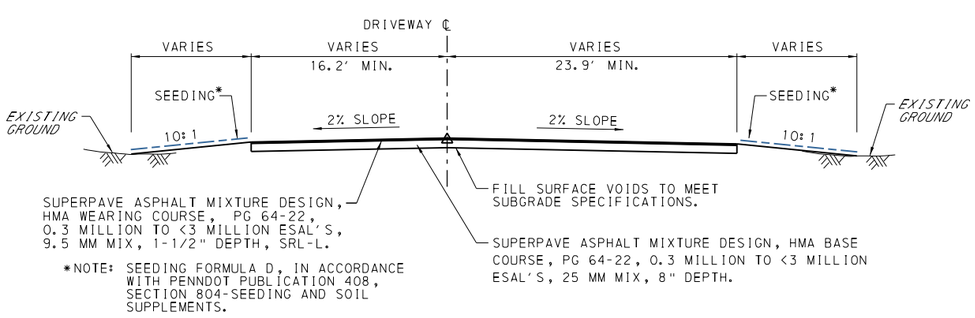

*NOTE: SEEDING FORMULA D, IN ACCORDANCE WITH PENNDOT PUBLICATION 408, SECTION 804-SEEDING AND SOIL SUPPLEMENTS.

DRIVEWAY PROFILE

NTS

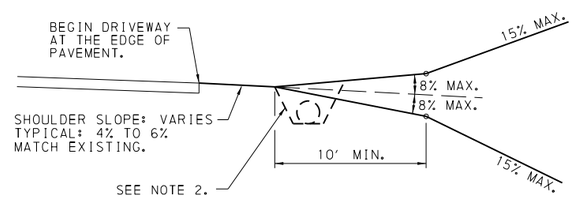

LEGEND

= DRIVEWAY PAVEMENT

= ROCK CONSTRUCTION ENTRANCE (AASHTO NO. 1 COARSE AGGREGATE)

APRIL 16, 2012

NOTES

1. ROCK CONSTRUCTION ENTRANCE TO BE CONSTRUCTED IN ACCORDANCE WITH THE DESIGN STANDARDS FROM PENNDOT PUBLICATION 72M, STANDARDS FOR ROADWAY CONSTRUCTION, RC-77M, WITH ACCEPTIONS DUE TO THE GEOMETRIC DESIGN OF THE DRIVEWAY.
2. DRIVEWAY SHALL BE CONSTRUCTED SO AS NOT TO IMPAIR DRAINAGE WITHIN THE RIGHT-OF-WAY, ALTER THE STABILITY OF THE IMPROVED AREA, OR CHANGE THE DRAINAGE OF ADJACENT AREAS. WHERE A DRAINAGE DITCH OR SWALE EXISTS, INSTALL ADEQUATE PIPE UNDER THE DRIVEWAY IN ACCORDANCE WITH PENNDOT PUBLICATION 72M, RC-30M AND PUBLICATION 408, SECTION 601-PIPE CULVERTS. DRAINAGE PIPE UNDER DRIVEWAYS SHALL MATCH EXISTING PIPE SIZE OR BE A MINIMUM OF 15" IN DIAMETER, WHICHEVER IS GREATER.
3. IF THE DRIVEWAY DESIGN IS ANTICIPATED TO CAUSE AN INCREASE IN FLOW RATE OR FLOW VELOCITY OF WATER ONTO THE HIGHWAY OR INTO DEPARTMENT DRAINAGE FACILITY, A DRAINAGE IMPACT REPORT (IN ACCORDANCE WITH PUBLICATION 282, HIGHWAY OCCUPANCY GUIDELINES) SHALL BE SUBMITTED FOR REVIEW TO THE APPROPRIATE PENNDOT ENGINEERING DISTRICT CONCURRENTLY WITH THE HIGHWAY OCCUPANCY PERMIT APPLICATION.
4. TRAFFIC CONTROL DURING CONSTRUCTION OF THE SITE DRIVEWAY SHALL BE IN ACCORDANCE WITH PENNDOT PUBLICATION 213, TEMPORARY TRAFFIC CONTROL GUIDELINES.
5. TRAFFIC CONTROL DURING NORMAL DRILLING AND HYDROFRACKING OPERATIONS SHALL INCLUDE AT A MINIMUM:
   A. INSTALL CONSTRUCTION ENTRANCE AHEAD SIGN (W25-5) ON THE STATE HIGHWAYS IN ADVANCE OF THE SITE DRIVEWAY IN ACCORDANCE WITH DEPARTMENT STANDARDS.
   B. PROVIDE A FLAGGER WITHIN THE DRIVEWAY APPROACH TO CONTROL ENTERING AND EXITING SITE TRAFFIC WITHOUT IMPARING THE FREE MOVEMENT OF NORMAL HIGHWAY TRAFFIC.
6. NO STAGING FOR OPERATIONS WILL OCCUR IN THE DEPARTMENT RIGHT-OF-WAY.
7. IMMEDIATELY REMOVE ANY MUD AND/OR DEBRIS THAT HAS BEEN TRACKED ONTO DEPARTMENT ROADWAYS.
8. REPAIR, WITHIN 24 HOURS, ANY DAMAGE TO DEPARTMENT ROADWAYS CAUSED AS A RESULT OF VEHICLES USING THE DRIVEWAY.
9. PROVIDE TYPE R4 ROCK (OR DEPARTMENT APPROVED MATERIAL) IN AREAS WHERE WHEELS TRACK OFF THE DRIVEWAY TO A MAXIMUM WIDTH OF 3'. IF SHOULDER DAMAGE OCCURS TO STATE HIGHWAY, THE DEPARTMENT CAN DIRECT 100' OF SHOULDER TO BE INSTALLED PER THE REGULATIONS IN TITLE 67, CHAPTER 441.8(n) OF THE TRANSPORTATION CODE.
10. SIGHT DISTANCE VALUES AT THE PROPOSED DRIVEWAY, FOR THE THREE CONDITIONS INDICATED ON PENNDOT FORM M-950S, SHALL MEET OR EXCEED THE REQUIREMENTS PER THE REGULATIONS IN TITLE 67, CHAPTER 441.8(h) OF THE TRANSPORTATION CODE.

MINIMUM USE DRIVEWAY DESIGN FOR UNCONVENTIONAL GAS DRILLING AND HYDROFRACKING WELL SITES

COMMONWEALTH OF PENNSYLVANIA
DEPARTMENT OF TRANSPORTATION

COUNTY : _____

TOWNSHIP/BORO. : _____

ROUTE NO. : _____

SEG./OFF. : _____

APPLICANT/OWNER : _____

ADDRESS : _____

POST OFFICE : _____ ZIP CODE : _____

G:\BOMO\MSC-RUC MinUse Driveway Design\MinUse-Driveway Design 2012-04-13.dgn
4/13/2012